Originally published in N.F.L.C.C. Magazine, Vol. 3, no. 2, January, 1994, and Vol. 4, no. 1, June, 1994

Steve Vernon

A Brief History Of Level-Wind Reels

Part I: The Ancestors

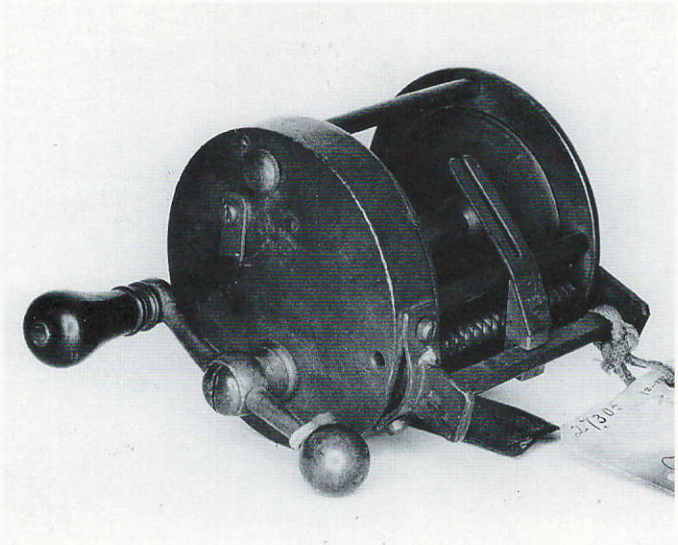

The model for Mark Palmer's 1860 level-wind patent.

Of all the gadgetry that has been added to fishing reels over the last couple of centuries, perhaps nothing attracts the attention of the collector as quickly as an unusual level-wind device on the front of an old reel. Its visibility is a major reason for this attention, of course, but many of the "Rube Goldberg" mechanisms that were devised to wind line smoothly around a reel spool arbor were amazing. Furthermore, all serious reel collectors have experienced the tranquilizing effect of watching a line guide oscillating slowly as a reel crank is sent spinning rapidly from the flick of a finger.

A collector could do worse than to specialize in level winds. The devices have a long and varied history. As a result, almost any type of reel collection can legitimately include at least one example. This article describes some of the inventions that have contributed to the complex evolution of the level wind.

The Early Inventions

The earliest level wind I know of was patented in 1860 by Mark S. Palmer, of New Bedford, Massachusetts. Consisting of a two-tine line guide travelling back and forth in a bi-directional, continuous, helical groove cut into a rotating shaft, Palmer's invention was basically the same as the devices found on today's baitcasters. The level-wind shaft was driven by the crank through a three-gear train. Thirteen

years later, Charles Noe patented a similar device, but Noe's guide was a small block with a small hole for the line. A reel tentatively identified as a Noe was sold at auction recently, but the driving mechanism was entirely absent. In 1879, Simon W. Wardwell, Jr., patented an innovative reel with a tiny line guide that travelled on a rotating shaft almost completely shielded within the front reel pillar. The guide could be pivoted down for casting. Wardwell apparently was associated with the textile or rope-making industry, as one of his later patents described a means for winding cylindrical balls of yarn or rope in a tight spiral ("kite-wind") pattern that resembled the groove on the level-wind shaft. In fact, several early level winds probably were adaptations of designs already used by the textile industry. The patent models for both the Palmer and Wardwell reels reside in the Smithsonian Institution. Thus, the earliest developments of what I call the "mainstream" level wind had been completed by 1879. The mechanisms in use today are direct descendants of those earliest inventions, though some now employ other means to inactivate the guide during a cast. During the next two decades, several strange-looking, yet similar, mechanisms were patented by others, including Andrew B. Hendryx, but none seemed to catch the fancy of the average angler.

In the meantime, the evolution of a second class of level winds had begun. George L. Crandal, of Binghamton, N.Y., invented a crank-driven, pivoting line guide, which was patented in 1886. The guide, at the upper end of a curved bracket that extended back under the spool, was pivoted from side to side on a vertical axis. A year later William D. F. Jarvis, of Philippi, W. Va., patented another vertical-pivot-axis guide driven by a more complex mechanism. It was not until 1897 that the first oscillating guide with a horizontal pivot axis was invented. The windshield-wiper-like motion of Rudolph C. Kruschke's line guide was produced by a pin on the guide stem riding in a spiral groove in a shaft rotated-ed by the crank. These pivoting guides, too, were the forebears of many level winds yet to come.

We can safely infer, from the scarcity of early level winds in collections, that few anglers were convinced that the level wind offered any significant advantage to casting. For almost forty years, these inventions seem to have been virtually ignored. Perhaps their complicated mechanisms simply didn't work very well; perhaps

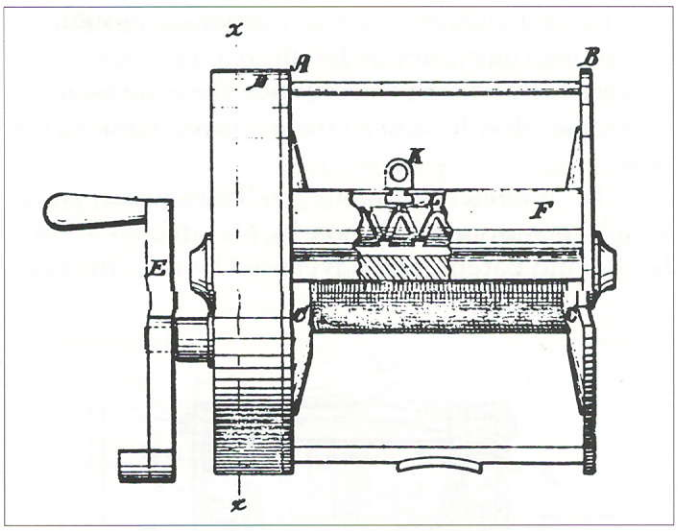

Noe's level wind.

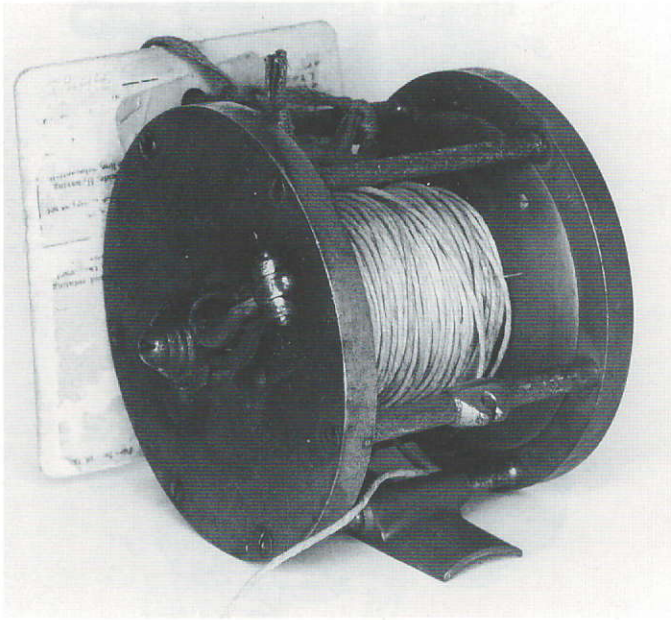

Wardwell's patent model with the line guide tipped forward.

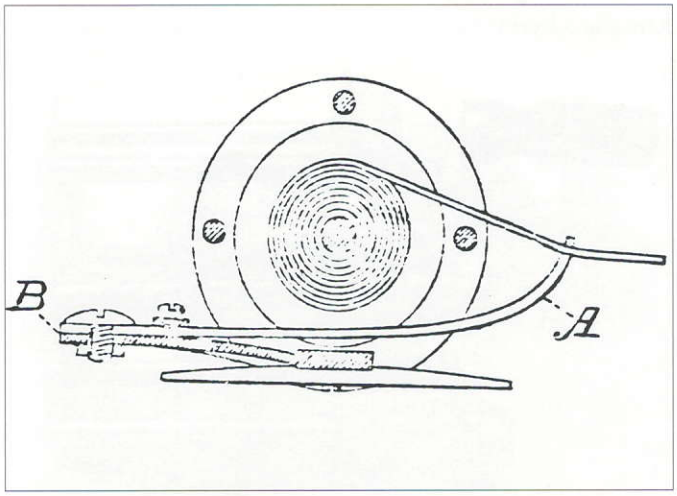

Side view of a section through the Crandal reel. The driving mechanism for the level wind is not shown.

casting-reel enthusiasts were extremely proficient at guiding their lines by hand. It took some high-powered advertising to convince the American fisherman that he had to have a level wind on his reel.

The Wheeler & McGregor "Milwaukee" reel, which incorporated Nelson H. McGregor's 1894 level-wind patent, was advertised heavily in sporting periodicals of the time. Its level wind, with a line guide only slightly wider in diameter than the line, probably did not operate much better than its predecessors. Almost simultaneously, McGregor patented a "direct drive" mechanism for the level wind, mounting the level-wind shaft coaxially with the main gear. By this time, however, anglers were more receptive to the idea

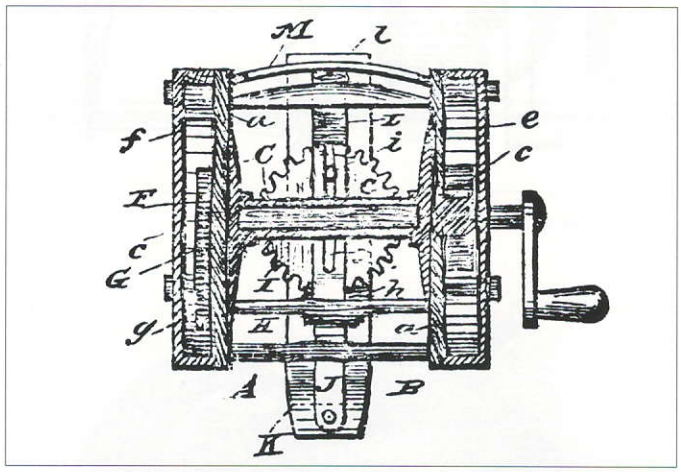

Top view of the Jarvis pivoting level wind.

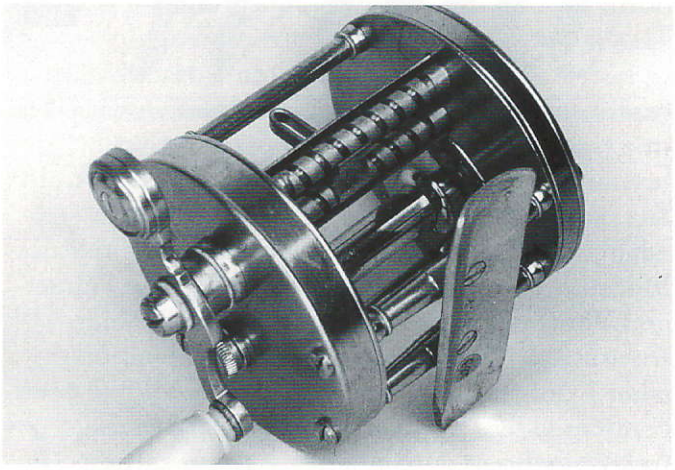

Shakespeare's double-shaft level wind on a "style B" reel.

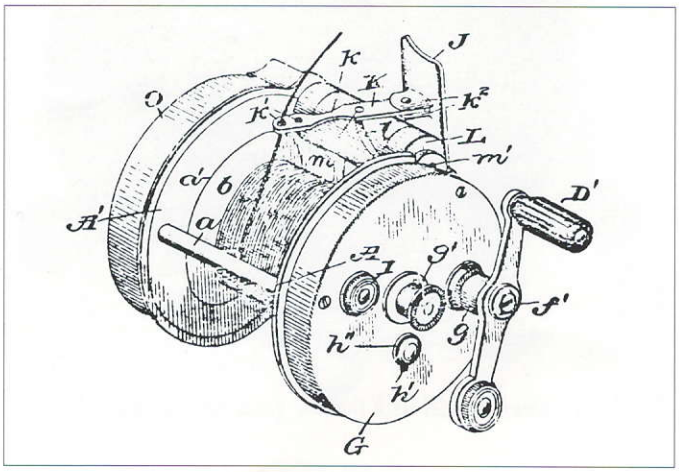

Kruschke's level wind.

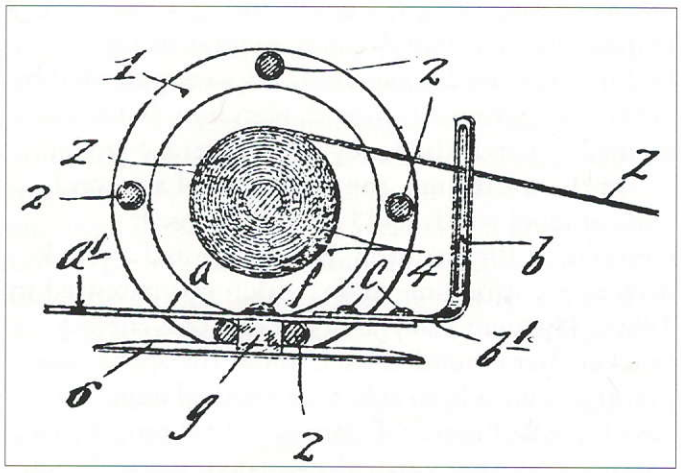

The Krueger and Hoffman level wind.

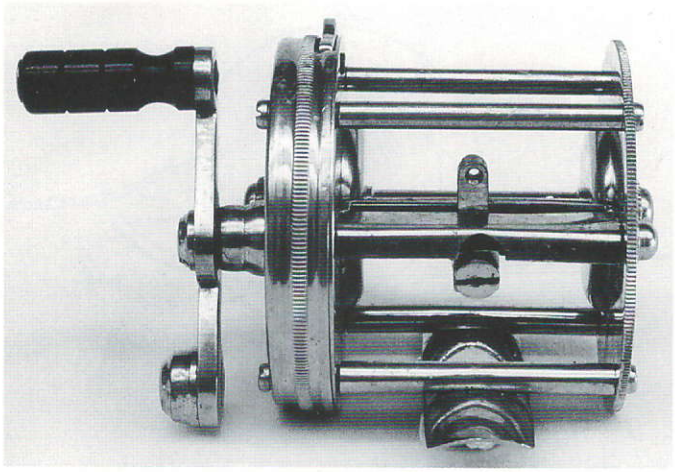

The Wheeler & McGregor "Milwaukee" reel.

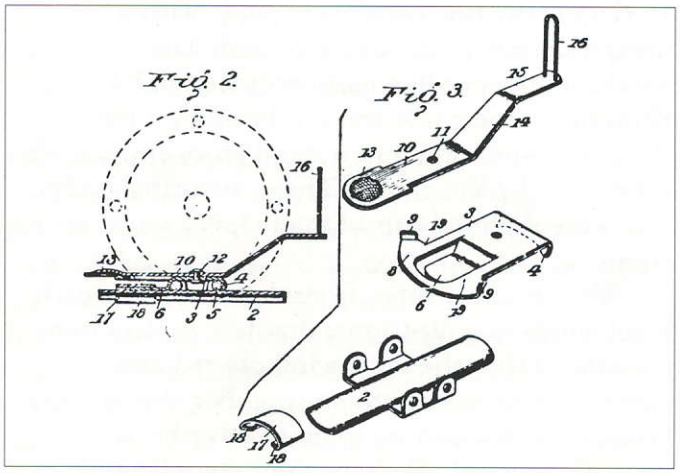

The components of the Ross thumb-powered guide.

of a mechanical winding aid. Anticipating a growing market for such devices, William Shakespeare, Jr., patented his bizarre, double-shaft level wind in 1897, introduced his level-winding "Style C" reel, and took the bait-casting world by storm. His invention relied on a line-guide pin alternately riding in the oppositely spiraled grooves in the two shafts. Although it was featured in his reels only for a couple of decades, Shakespeare eventually would lead the way in developing improved versions of Palmer-style, mainstream level winds. Despite his late entry into the level-wind field, Shakespeare often has been credited with the invention of the mechanism, due to efforts of such writers as his son.

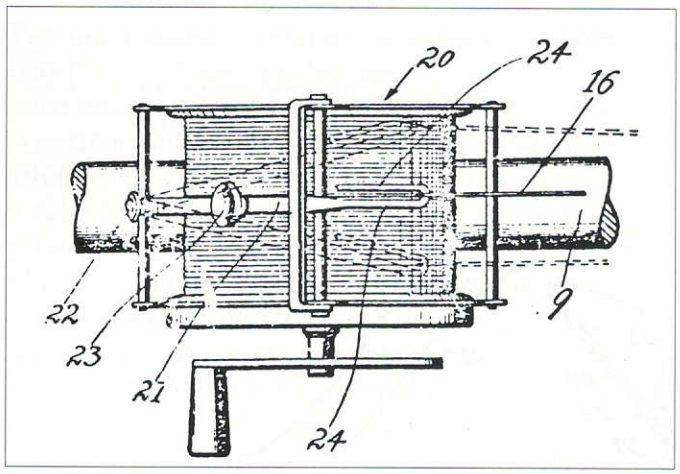

Top view of Unger's alternative sliding line guide.

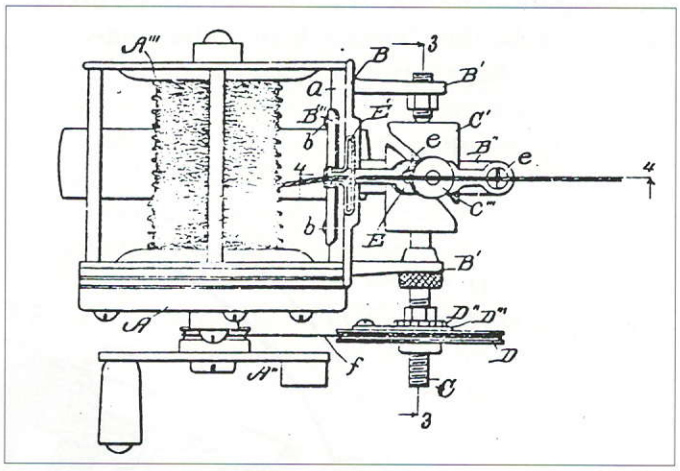

Top view of the Rhodes belt-driven line guide.

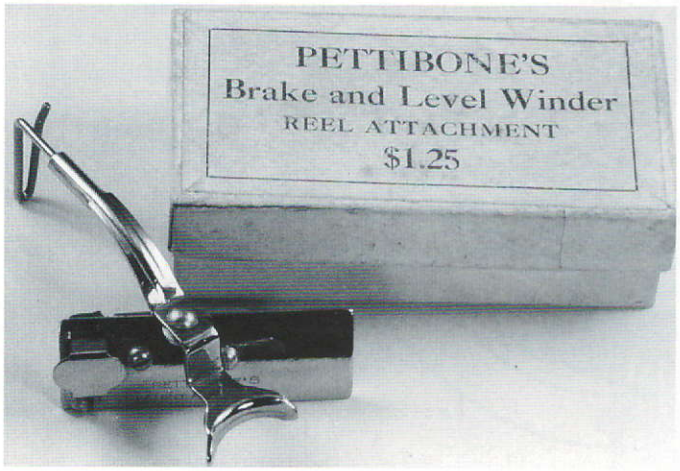

Pettibone's Brake and Level Winder."

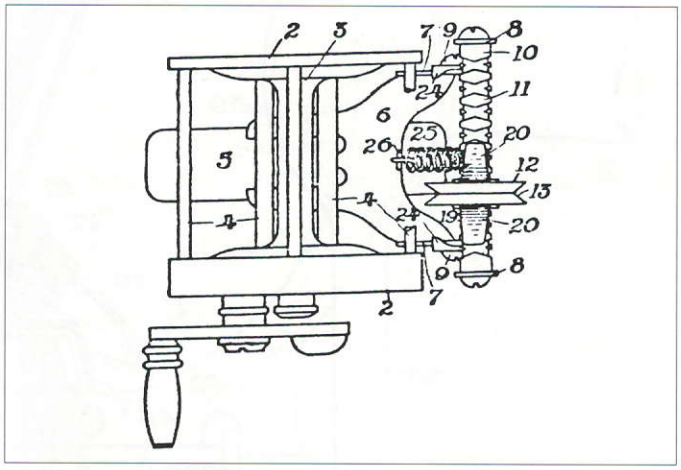

Top view of the Krause retrofittable, pivoting level wind.

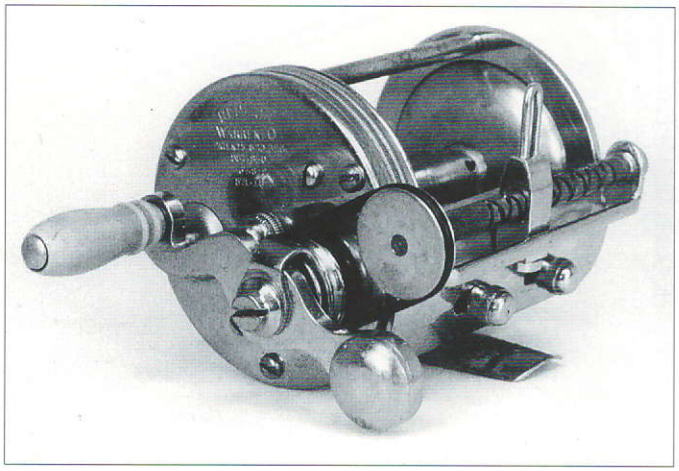

The Bishop level wind mounted on a Redifor bait-caster.

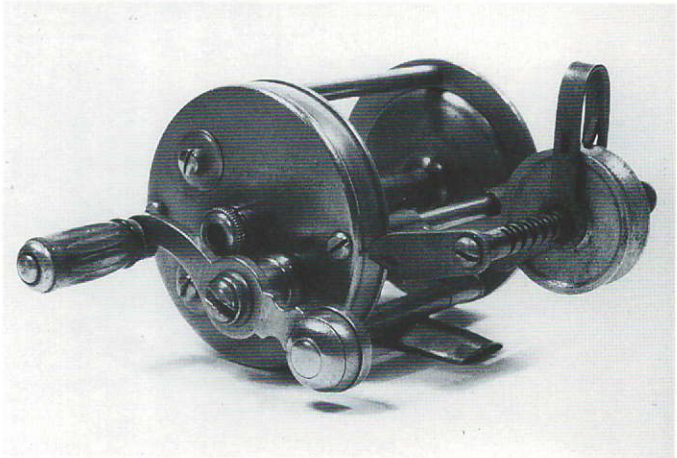

Flegel's "Redifor Spooler" mounted on a Pflueger reel.

Divergent Evolution in the Twentieth Century

During the first two decades of the twentieth century, the variety of level-wind styles expanded. As the popularity of the level wind grew, some inventors designed "add-on" devices that could be retrofitted to non-level-wind reels. Others devised mechanisms that could be operated by thumbs, rather than by cranks. For example, Henry Krueger and Richard J. Hoffman, of Minneapolis, patented their thumb-driven guide in 1902. Like the Crandal device, the guide swung back and forth around a vertical axis. A similar invention was patented in 1906 by Labron B. Ross of Logansport, Ind., and was sold as the "Ross Thumb Spooler." In 1909, Charles W. Unger, of Los Angeles, patented another thumb-swivelled guide with a line roller. His alternative design included a guide, anchored loosely on the rear pillar and reaching over the top of the reel, that could be slid sideways by thumb power. There is a limit, of course, to what a thumb can be expected to do while its owner is cranking his

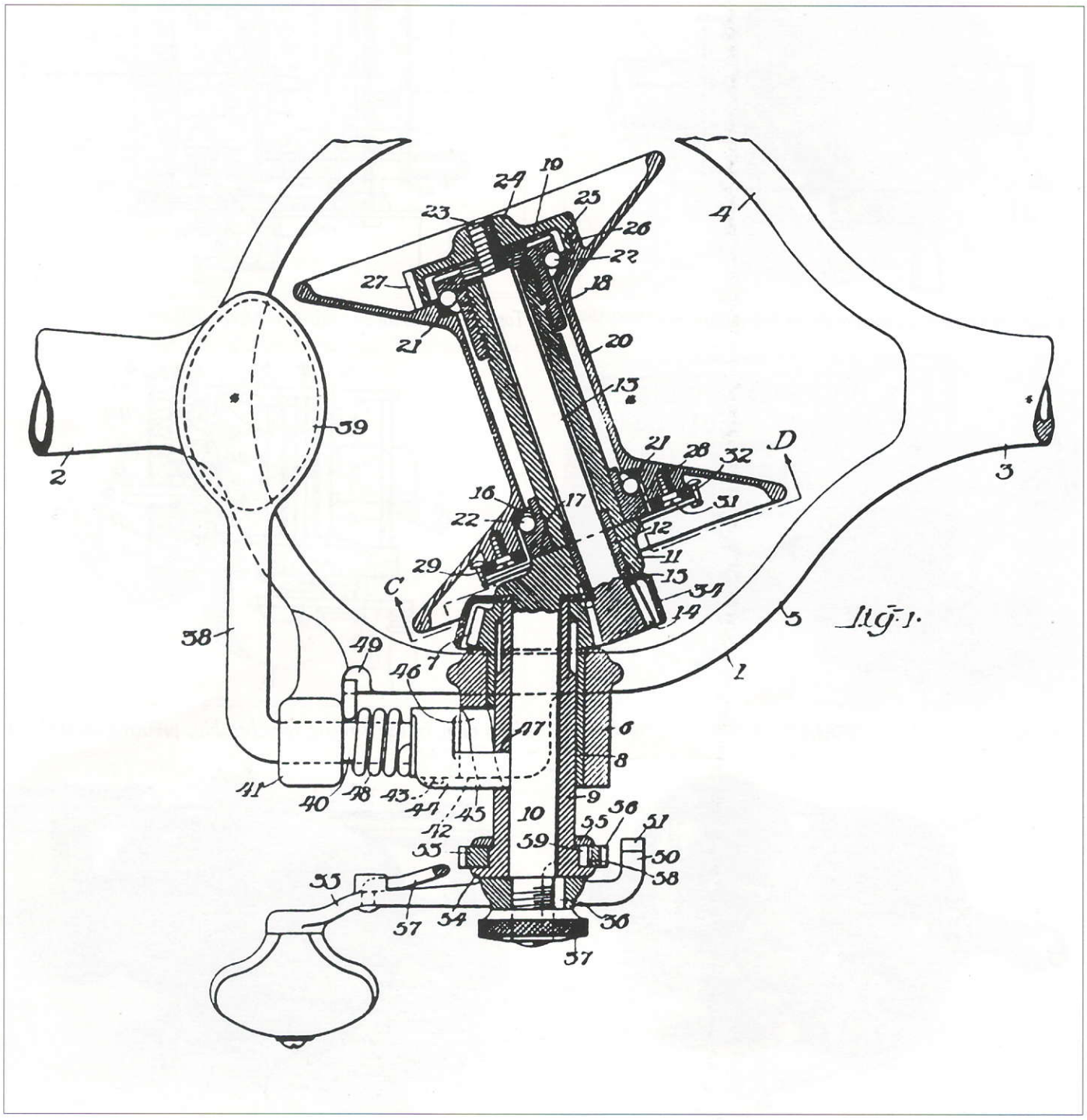

Crandal's "Gyratory Reel" in its huge cradle. 1908

reel. All of the later thumb-powered level winds, including the "Pettibone's Brake and Level Winder", an add-on device marketed in the mid-1910's, apparently required side-to-side motion of the thumb. Although it is conceivable that a line guide could be moved sideways with an up-and-down motion of the thumb, I'm not aware of any such invention.

Retrofittable devices driven by cranking also appeared. The shaft of Abner W. Bishop's 1903 Palmer-style level wind was rotated by a rubber band connecting a pulley on the end of the shaft with another mounted beneath the reel crank. Another rubber-band-driven device, patented in 1906 by Bert O. Rhodes, of Kalamazoo, employed a cylinder with cam-slots in which a line-guide pivoted with windshield-wiper action. In 1908, Hans A. and Norman Krause, of Racine, patented a pulley guide that rode on a Palmer-style shaft; line tension allegedly was sufficient to turn the pulley. The shaft was mounted in a bracket that could be swivelled down to free the line for casting and whose base was clamped below the reel. The Krause level wind, available with nickel or silver plating, was the direct ancestor of the well known "Redifor Spooler," patented by Benjamin F. Flegel in 1915. Flegel's invention, mounted on the front reel pillar, was a much more efficient design than the Krause's.

Another approach to level winding originated with Henry F. Crandal's 1908 invention of the "Gyratory Reel," which employed a spool with a rotational axis that was offset from that of the crank. The resultant motion wound the line in a "kite-wind" pattern around the arbor. Crandal also patented a cradle reel of similar design. Few inventors seem to have followed Crandal's lead, and I am aware of only two other level-wind designs featuring an oscillating spool: The retrofittable "Gem Reel Winder" employed a guide that pivoted on a horizontal axis, but the operating power was provided as the entire reel wobbled back and forth behind the guide, causing the special reel base to pivot the guide, too. The "Gem" was sold around 1920. Cranking a Swedish reel called the "Rainbow 888", apparently a product of the 1960's or later, caused the entire reel to swing back and forth around a vertical axis through the middle of the foot.

The second half of this article will appear in the next issue of the NFLCC Magazine and will describe the descendants of these inventions during "The Age of Level Winds".

Credits

Redifor Spooler from collection of Dick Wilson. Line drawings are reprinted from patent applications. Photo of Wheeler-McGregor reel by Ron Gast. Photos of Pettibone and Rainbow reels by Dudley Murphy. Other photos are by the author. Photos of Palmer, Wardwell, "Milwaukee" and Shakespeare reels are reprinted from Antique Fishing Reels, Stackpole Books, Harrisburg, Pa., 1985.

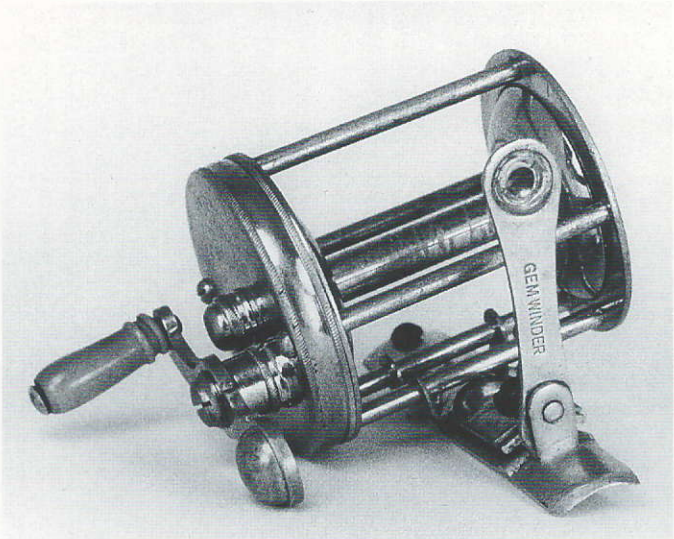

The "Gem Reel Winder," whose guide swivels when the reel oscillates.

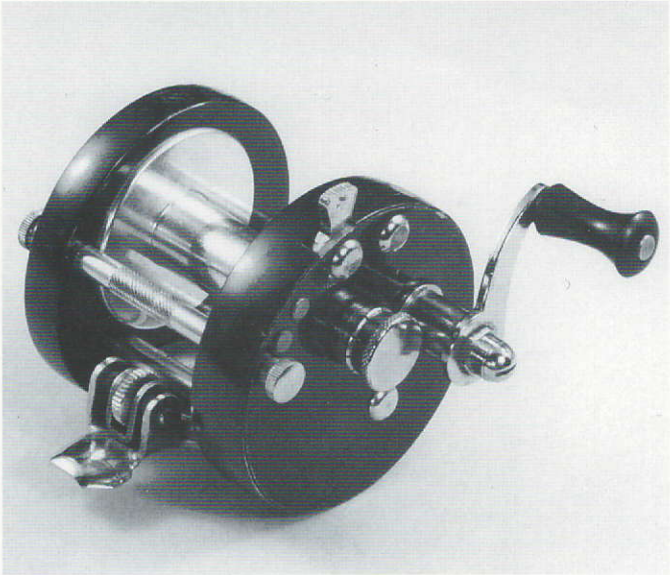

The components of the Ross thumb-powered guide.

Steve Vernon

A Brief History Of Level-Wind Reels

Part II: The Age of Level Winds

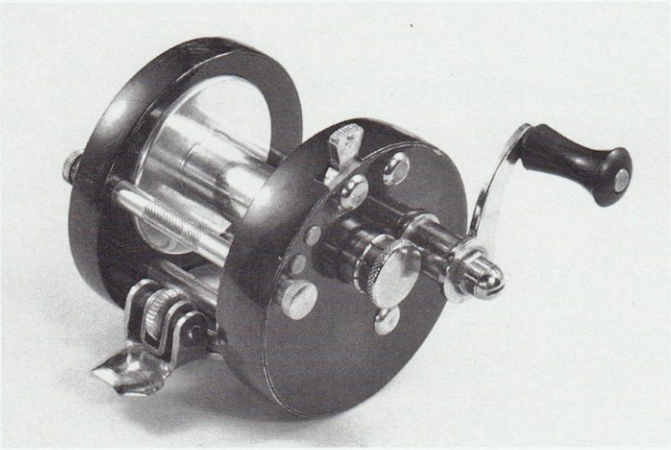

A Swedish "Rainbow 888", which swivels when cranked. This reel was mis-identified as a "Ross thumb-powered guide" in Part 1 of this article (MAGAZINE Vol.3, No. 2, January 1994).

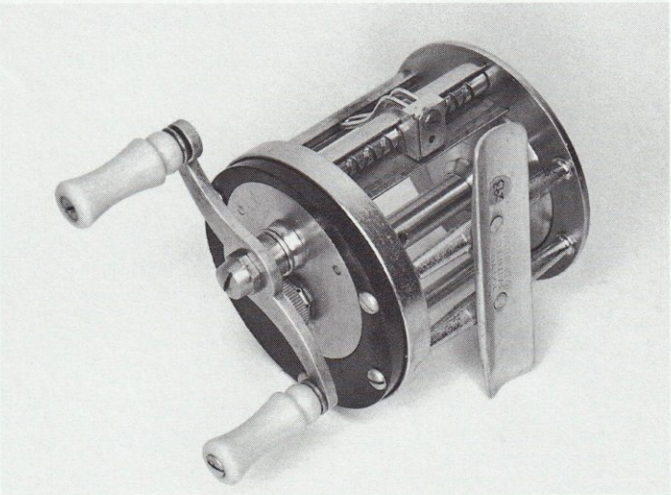

The level wind of a Shakespeare "Marhoff" reel.

Even as inventors were following various paths in their quests for the perfect level wind, the major link between Palmer's invention and the modern level wind had already been marketed. After a "false start" in the previous year, Walter E. Marhoff patented, in 1907, what was to become the model for innumerable level winds built during the next several decades. His invention, based on the Palmer design, included a shield for the shaft, a groove in the upper pillar to support a bent-wire guide, and a simple, effective pawl ("half-nut") that could be replaced easily when worn. Though the reel was first marketed by the Marhoff Reel Co., the rights were acquired by Shakespeare, which not only manufactured the "Marhoff Reel" for years to come, but incorporated the design into many of their other level-winding reels. The company would continue to patent level-wind improvements, but the basic design remained. By 1920, Shakespeare offered six different models of level-winding reels, all but one featuring Marhoff's design. Shakespeare's promotion of the level wind probably was the single most important factor in convincing American anglers of its necessity.

Shakespeare had competition, of course. In 1906, Harry 1. Richardson had patented a level wind with a two-tine wire guide that, like Wardwell's guide, pivoted forward to release the line for casting. At least one reel made by the America Co. incorporated the invention. Tilting guides soon became a favorite feature of inventors of Palmer-style level winds. The pivoting guide patented by George W. Upton and Benjamin F. Flegel in 1918 became the distinguishing feature of the "Beetszel Reel", marked first with the name of Upton's Redifor Rod & Reel Co., then with the Shakespeare name. Similarly,

Francis M. Case's tiltable guide of 1920 was one of the two major features of the first Pflueger "Supreme."

During the subsequent two decades, level winds became essential features of casting reels. Shakespeare and Pflueger level-wind reels, many manufactured for, and bearing the names of smaller companies, filled retailers' shelves. Faced with the growing popularity of the level wind, other manufacturers followed suit. Heddon adopted several of Jack Welch's Palmer-style level-wind patents for some of their reels. Their highly sought 4-15 and 4-18 models, whose line guide "windshield-wiper" action was produced by offset guide bases riding in offset grooves around rotating, cylindrical shafts, were descendants of Kruschke's and Rhodes' inventions. Pliny Catucci, the inventive inspiration of the Meisselbach-Catucci Manufacturing Co. in Newark, N. J., patented a pivotable pulley guide resembling the "Redifor Spooler" in 1924. His "Symploreels" were equipped with more conventional, Palmer-style level winds. "Okeh" reels made by the A. F. Meisselbach Manufacturing Co. in Elyria, Ohio, were equipped with pivoting, "Beetszel"-like line guides. The Horton Manufacturing Co., breaking a century-old tradition, equipped their Kentucky-style Models 10 and 30 with what were by now "mainstream" level winds. By the end of the 1930's, the casting purist had to *remove* the level wind from his new reel. The latest retrofittable level wind I know of was the "Surf Winder," patented in 1942 and made by the Yale Metal Products Co., Strasburg, Pa. It was a mainstream device with a pulley guide and was clamped to the rod in front of the spool.

A unique approach to level winding was launched with the patents of Hyla F. Maynes, of North Tonawanda, N. Y., beginning in 1934. His remarkable level winds, used in the popular products of the family-run Spiral Wind Fish Reel Co., relied on a rotating spiral bar, instead of a line guide, along which the line slid from side to side during cranking. After each rotation, the bar reversed its direction. Eventually, the patent rights were sold to the Penn Fishing Tackle Manufacturing Co., whose "Leveline" reels, still available, employ a uni-directional rotating bar. A simpler version of the mechanism was demonstrated in the reels of the Smooth Caster Manufacturing Co. of Detroit, which included spiral flanges on the spool arbor. The line slid back and forth as the spool rotated.

Perhaps the only significant variations on the Palmer level-wind theme over the last 130-odd years have been prompted by attempts to free the line from the interference of the guide during casting. Wardwell's pivoting guide was a practical solution, and it spawned a host of imitations. Relatively modern reels such as the Heddon "Mark IV Model 3200" and the Ocean City "Inductor" were, perhaps, the last to include such

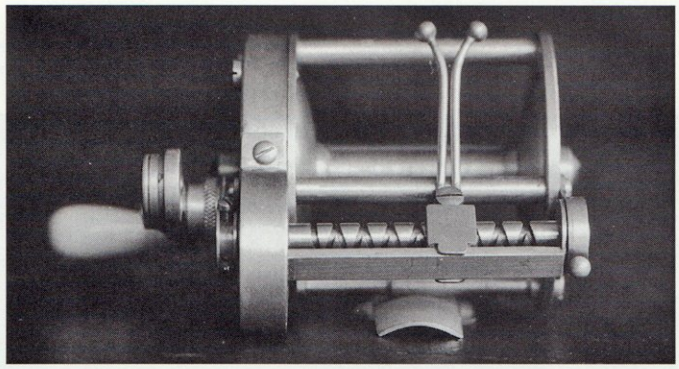

Richardson's tilting level wind on what is thought to be a prototype reel.

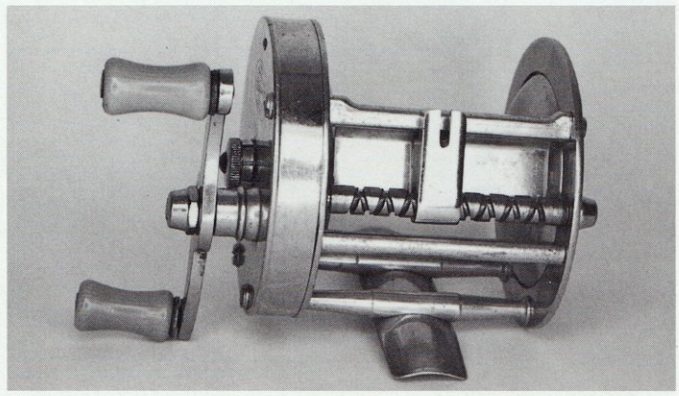

A "Beetszel" reel with Upton and Flegel's pivoting line guide.

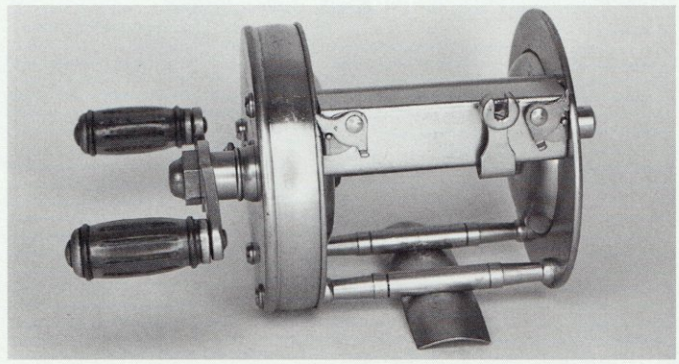

Case's tilting level wind on the first version of the Pflueger Supreme.

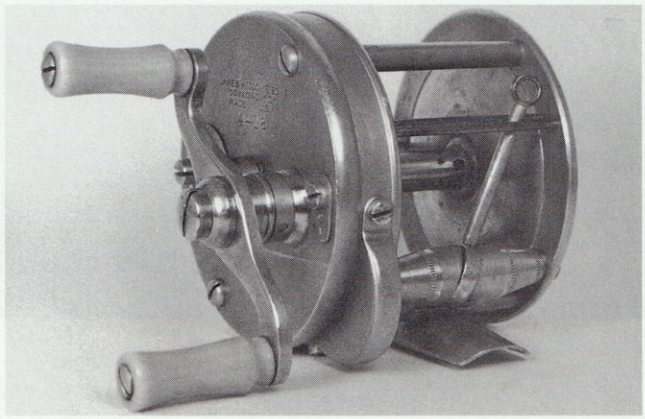

The Heddon 4-18 with its "windshield-wiper" level wind.

Wardwellian devices. Although some modern level winds solve the line-interference problem with guide wires that separate, or guides that remain stationary, during casting, modern materials and quality of manufacturing generally obviate the complex mechanisms required to operate these devices.

Level winds have facilitated bait-casting for a long time. In spite of the last half-century's fascination with the spinning reel, level-wind casting reels are enjoying a well-deserved comeback. Mark Palmer's inspired creation should continue to help fishermen of the 21st century. ❧

Credits: *Photo of Richardson level wind by Ron Fritz. Photos of Rainbow, Yale, Spiral Wind, Smooth Caster, Heddon 3200 by Dudley Murphy. Other photos by the author, most of them and the Richardson reprinted from Antique Fishing Reels, Stackpole Books, Harrisburg, Pa., 1985.*

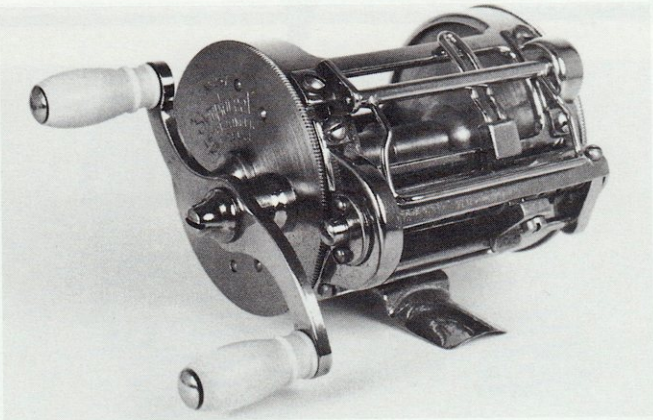

A Meisselbach-Catucci "Symploreel" with a fairly conventional level wind buried under an anti-backlash bail.

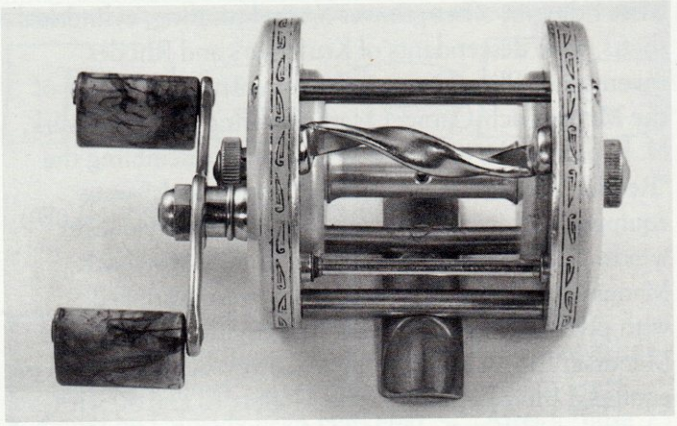

One of the various models of "Spiral Wind" reels with bidirectional, rotating spiral line guides.

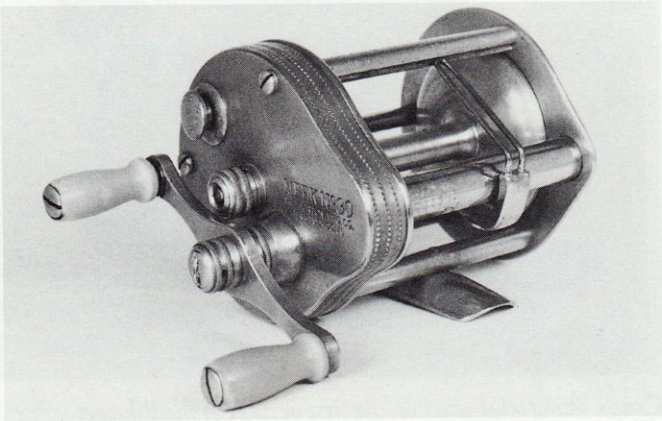

A Horton "Meek" No. 30, with its Palmer style level wind.

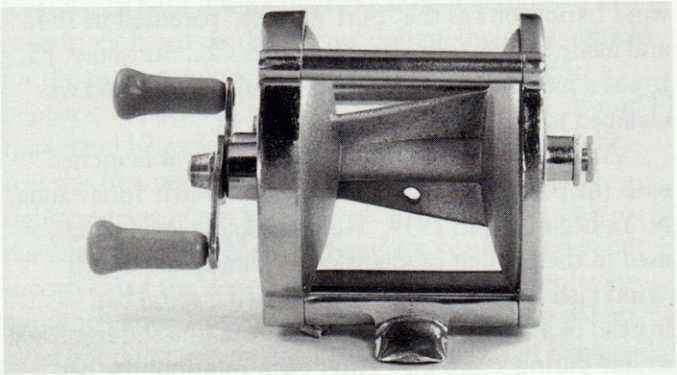

The spool arbor of the "Smooth Caster" is fitted with two spiral flanges for winding line evenly.

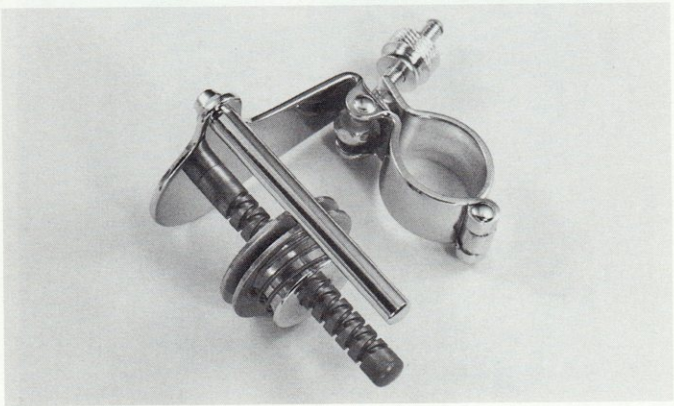

The Yale "Surf Winder", which is to be clamped to the rod.

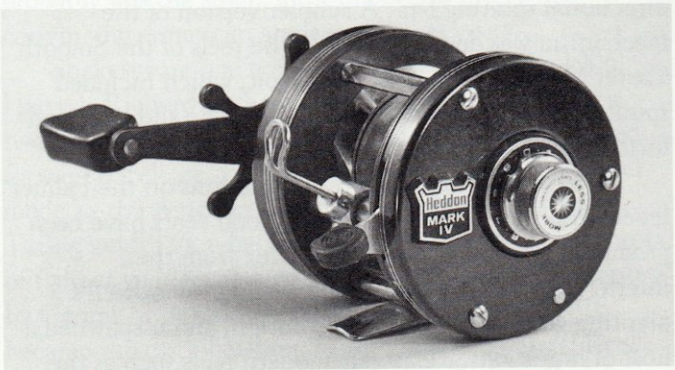

A Heddon "Mark IV Model 3200", whose line guide pivots down with the press of a lever.

Evolution of the Level Wind Reel

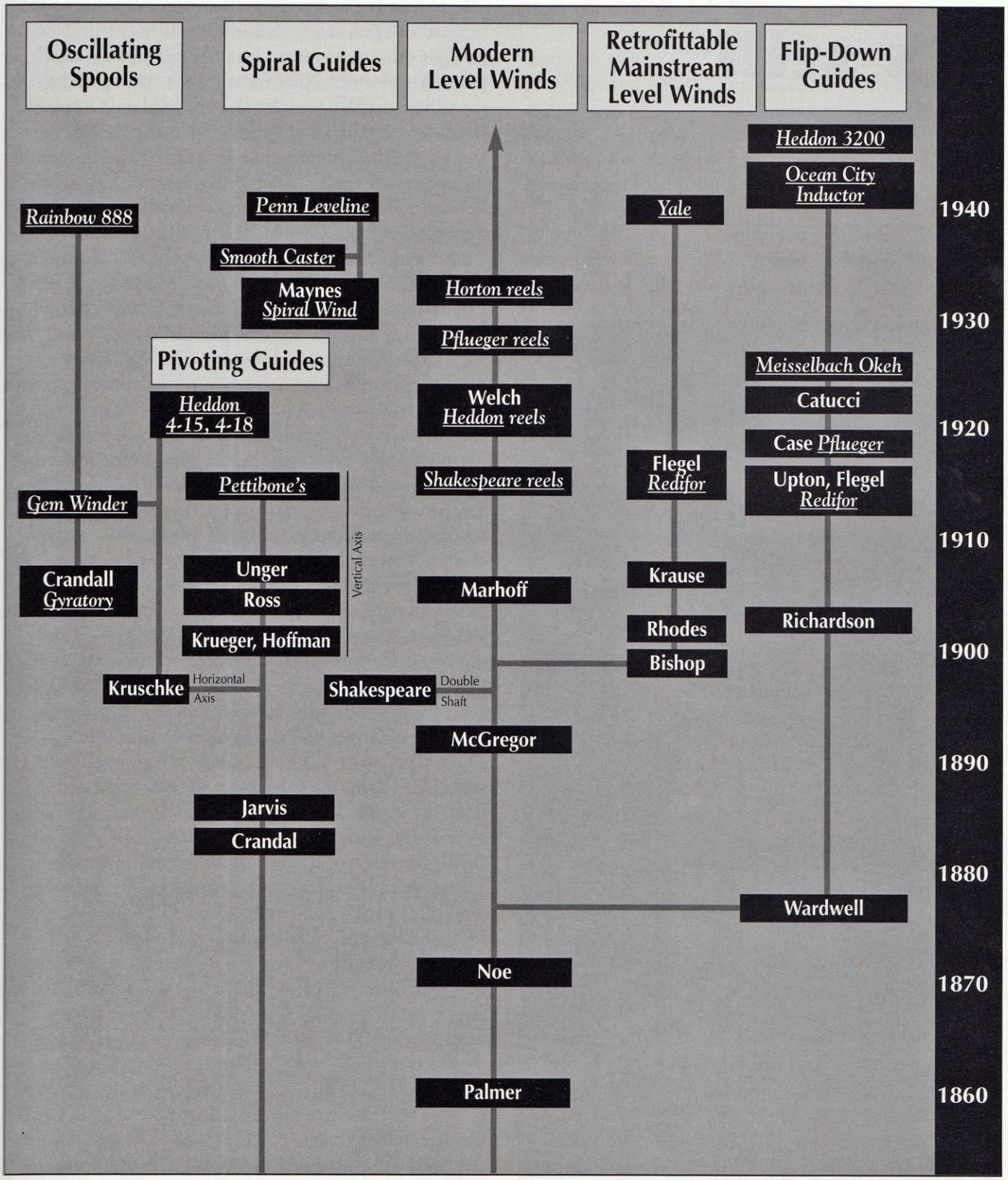

Inventor's names - **Bold**, Company & Brand names - ***Italic***